THIS DRAWING REMAINS THE PROPERTY OF JDW DRAUGHTING SERVICES J.A.M.DE WAAL,12 BRIGHTWELL STREET PAPAKURA 2110 NEW ZEALAND (09)2988815 IF IN DOUBT ASK

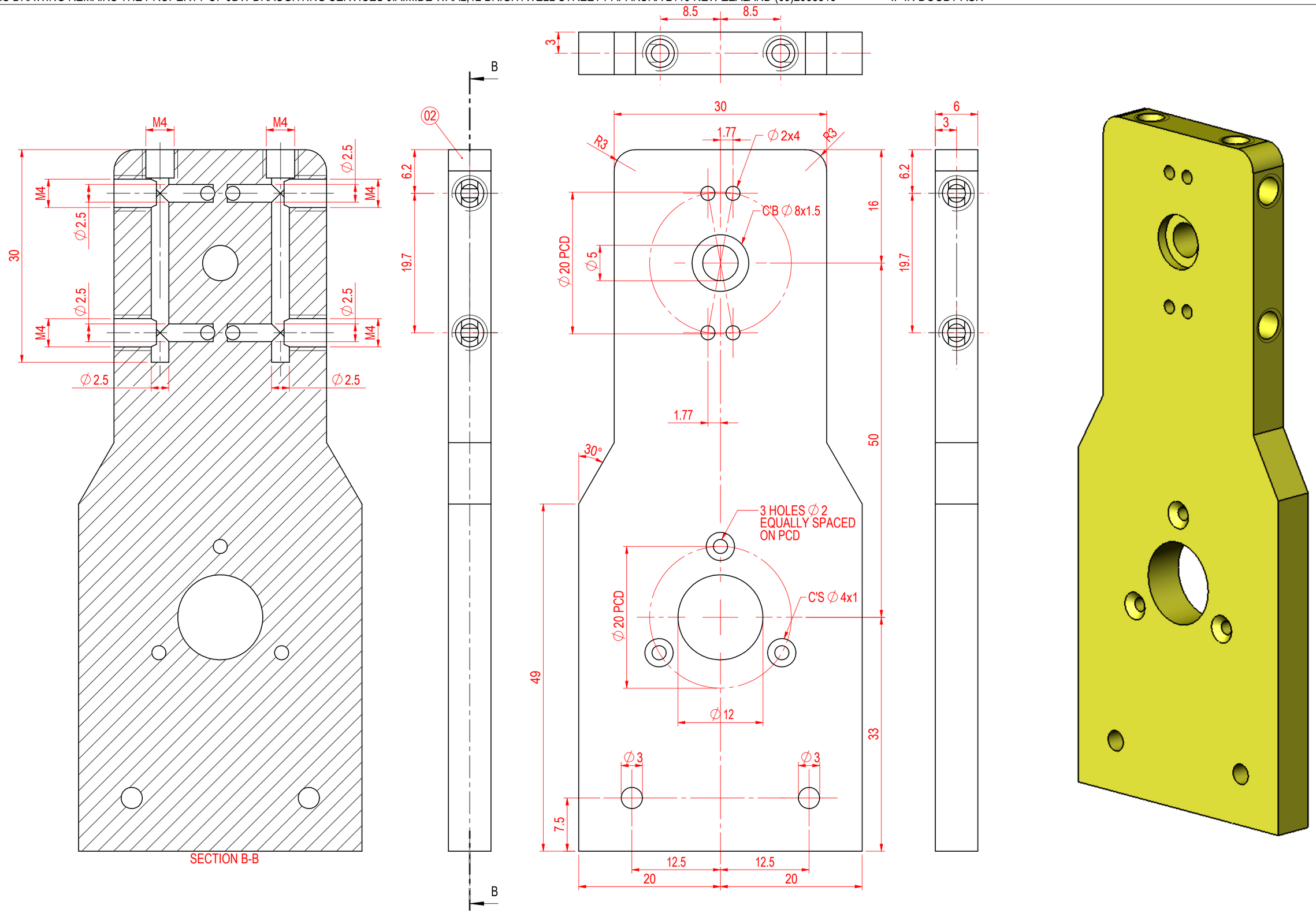

EEN CILINDER OSCILLERENDE STOOMMACHINE (ONDERDELEN)

	TITLE			JDW DRAUGHTING SERVICES 12 BRIGHTWELL STREET PAPAKURA NEW ZEALAND TEL/FAX 0064-09-2988815 E-MAIL:dewaal@xtra.co.nz	DRAWN BY J.A.M. DE WAAL	PROJECTION	DRAWING NUMBER SCOSE	SHEET 01
A3	SINGLE CYLINDER OSCILLATING STEAM ENGINE. COMPONENTS	A	ISSUED TO NVM		DATE JUNE 2009	SCALE 2:1 or AS SHOWN	CAD FILE	REV A
		REV	DESCRIPTION	DATE				

IF NOT STATED ALL CHAMFERS AND FILLETS 0.25mm

REMOVE ALL BURS AND SHARP EDGES