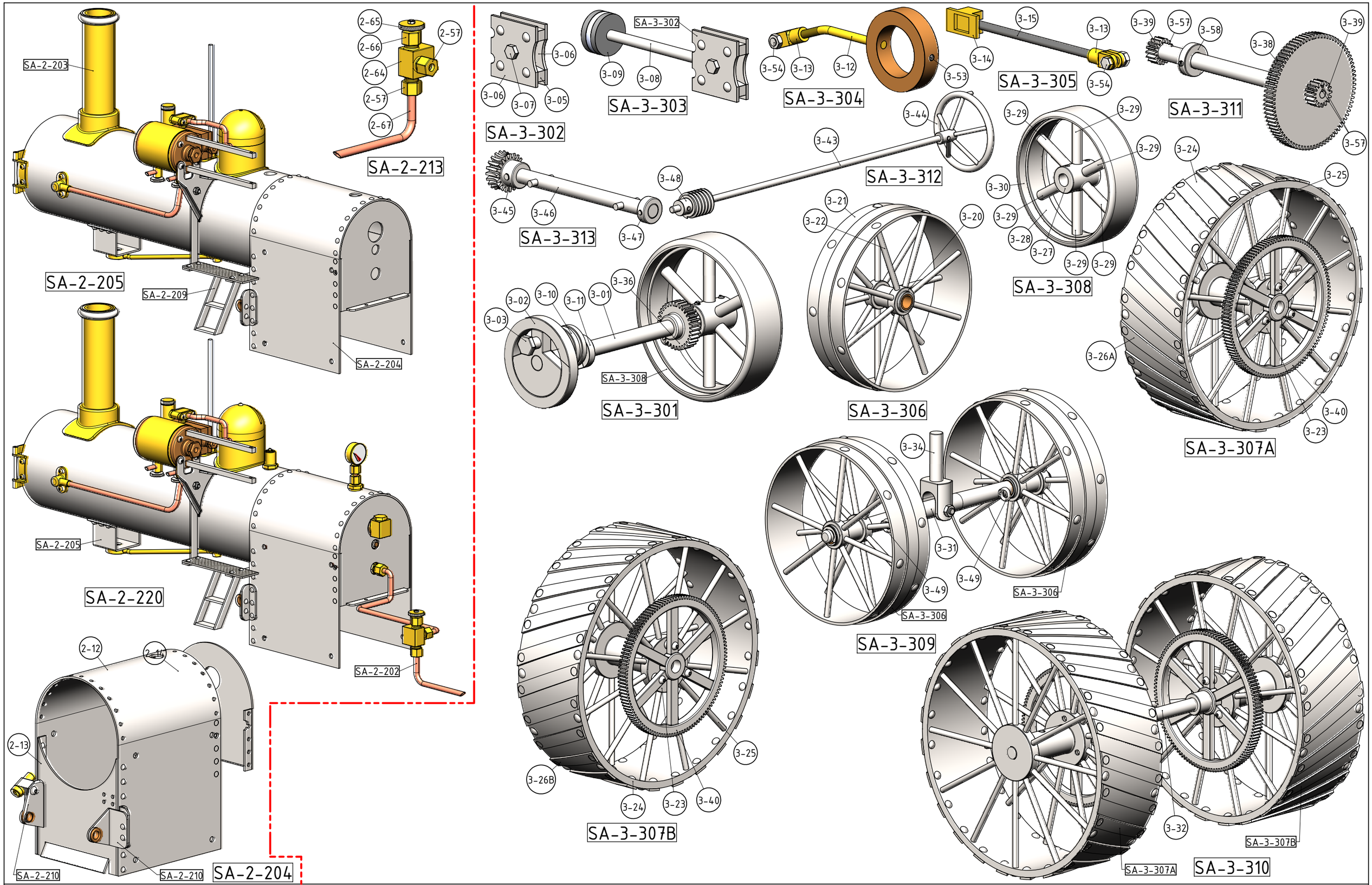

NOTES: THIS MODEL TRACTION ENGINE IS LOOSLY BASED ON UPON THE FULL-SIZE TRACTORS FORMERLY BUILT BY THE J. I. CASE CO. BUT IS NOT AN EXACT SCALE REPLICA

TITLE KEROSINE FIRED MODEL STEAM TRACTION ENGINE CALLED "JULIAN"	DRAWING CONTENTS PARTS AND ASSEMBLIES	PROJECT No 08-07-00 JDW DRAUGHTING SERVICES J.A.M. DE WAAL. 12 BRIGHTWELL STREET PAPAKURA 2110. NEW ZEALAND. PHONE: 0064 09 2988815. MOB: 0211791000 E-MAIL: dewaal@xtra.co.nz.	PROJECTION JDWDS DATE JUNE-2015 SHEET: 09 OF 10	MODEL SCALE: 1:1 DWG SCALE: NTS @A3 OR AS SHOWN Copyright © J.A.M. DE WAAL PAPAKURA NZ A3 No: JULIAN-09