THIS DRAWING REMAINS THE PROPERTY OF JDW DRAUGHTING SERVICES J.A.M.DE WAAL,12 BRIGHTWELL STREET PAPAKURA 2110 NEW ZEALAND (09)2988815 IF IN DOUBT ASK

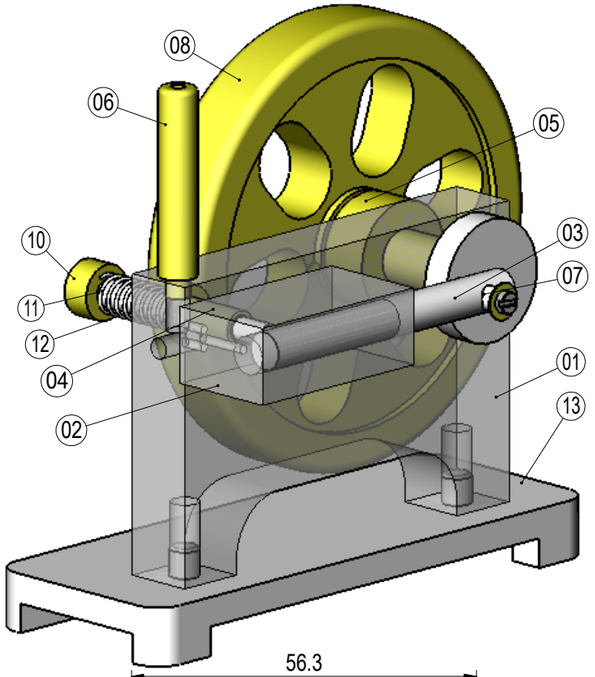

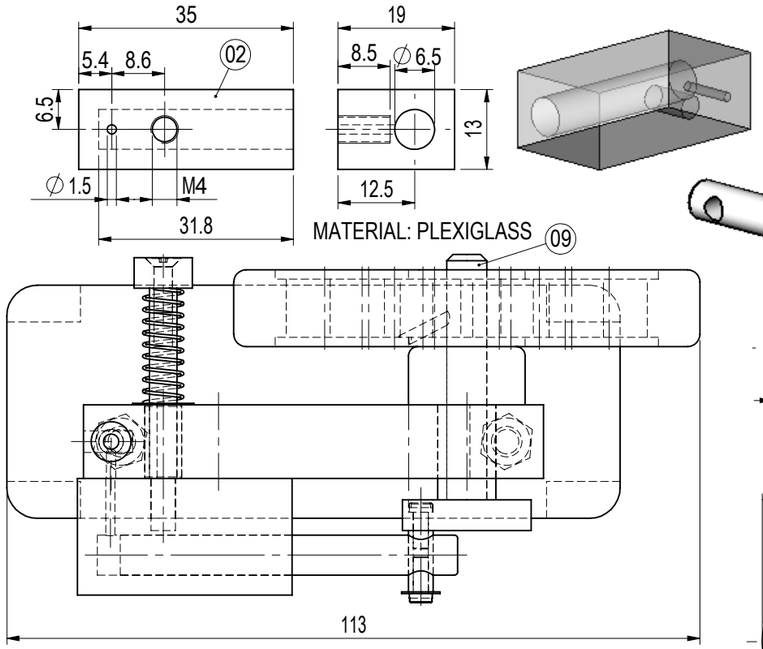

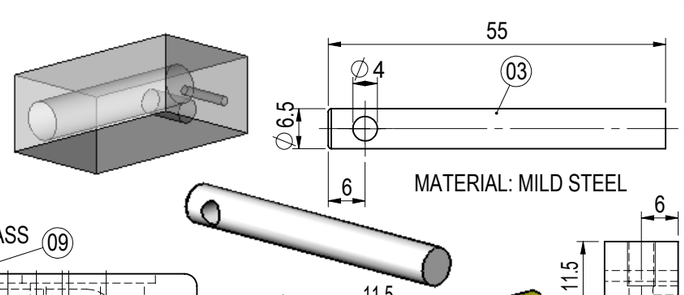

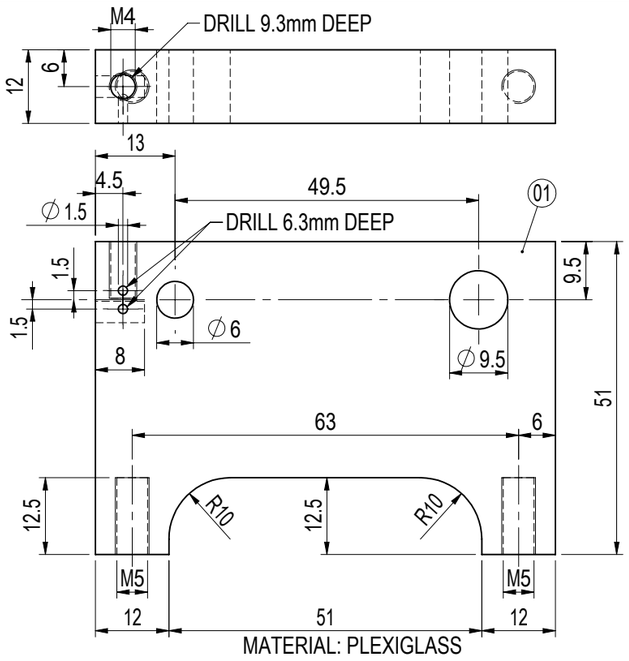

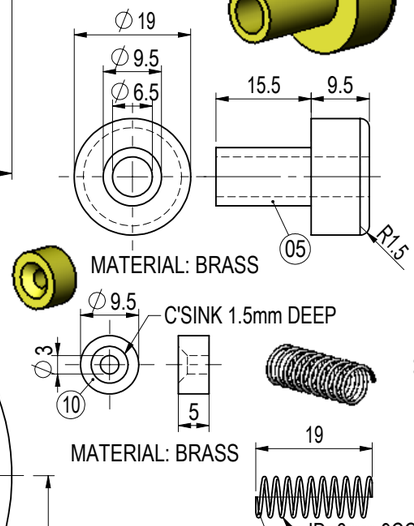

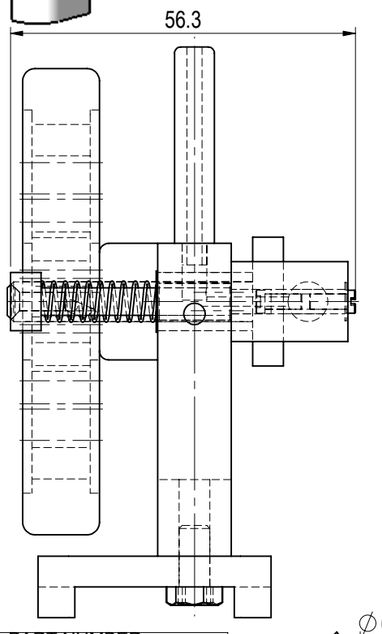

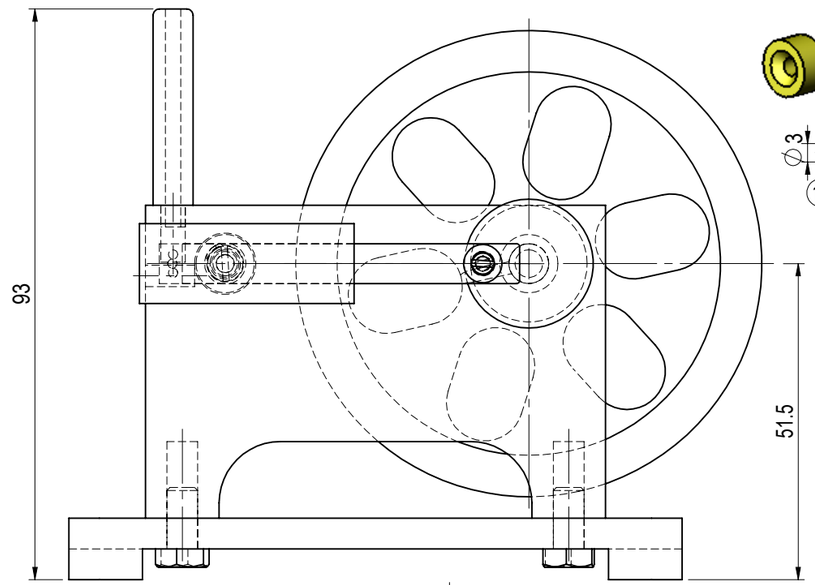

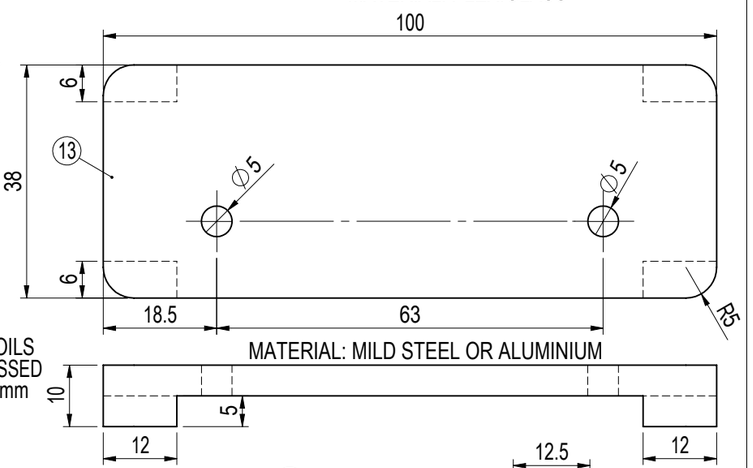

QTY.	PART NUMBER
1	LUCY1-01-CYLINDER PLATE
1	LUCY1-02-CYLINDER
1	LUCY1-03-PISTON
1	LUCY1-04-SLEEVE
1	LUCY1-05-BRASS SLEEVE
1	LUCY1-06-AIR INLET
1	LUCY1-07-CRANK PIN
1	LUCY1-08-FLYWHEEL
1	LUCY1-09-CRANK SHAFT
1	LUCY1-10-SPRING CAP
1	LUCY1-11-SPRING SHAFT
1	LUCY1-12-SPRING
1	LUCY1-13-BASE
2	M2.5x6 CYLINDERHEAD SCREW
1	M3 WASHER
1	M3x5 COUNTERSINK SCREW
1	M5 WASHER
2	M5x10 HEX BOLT

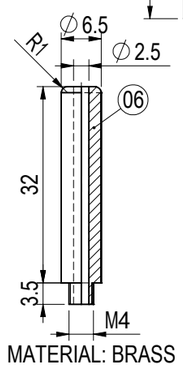

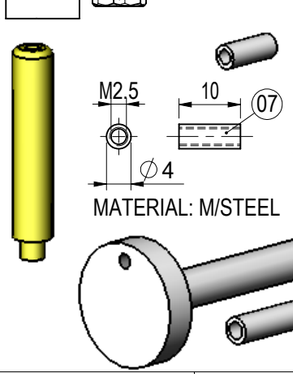

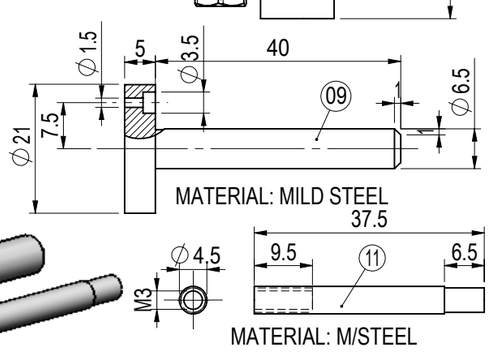

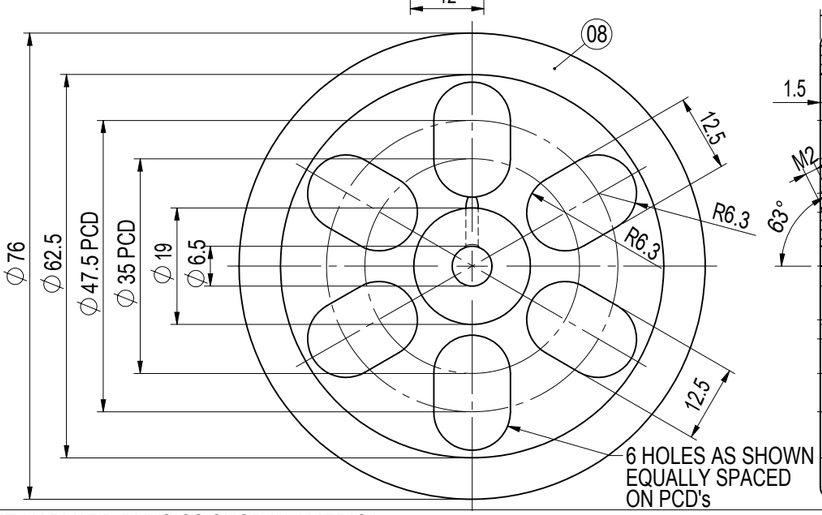

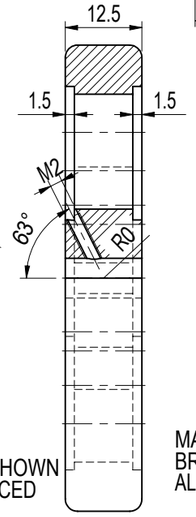

EEN CILINDER OSCILLERENDE STOOMMACHINE GENOEMD LUCY (ALGEMEEN OVERZICHT) | THIS WAS A PROJECT UNDER TAKEN BY THE STUDENTS OF THE HARVARD PHYSICS SHOP IN AMERICA

TITLE

SINGLE CYLINDER OSCILLATING STEAM ENGINE NAMED "LUCY"
GENERAL ARRANGEMENT AND COMPONENTS

A3

REV	DESCRIPTION	DATE
A	ISSUED TO NVM	

JDW DRAUGHTING SERVICES
12 BRIGHTWELL STREET
PAPAKURA NEW ZEALAND
TEL/FAX 0064-09-2988815
E-MAIL:dewaal@xtra.co.nz

DRAWN BY	PROJECTION	DRAWING NUMBER	SHEET
J.A.M. DE WAAL		LUCY 1	00
DATE	SCALE	CAD FILE	REV
JULY 2009	1:1 OR AS SHOWN		A

IF NOT STATED ALL CHAMFERS AND FILLETS 0.25mm DO NOT SCALE OF DRAWING REMOVE ALL BURS AND SHARP EDGES